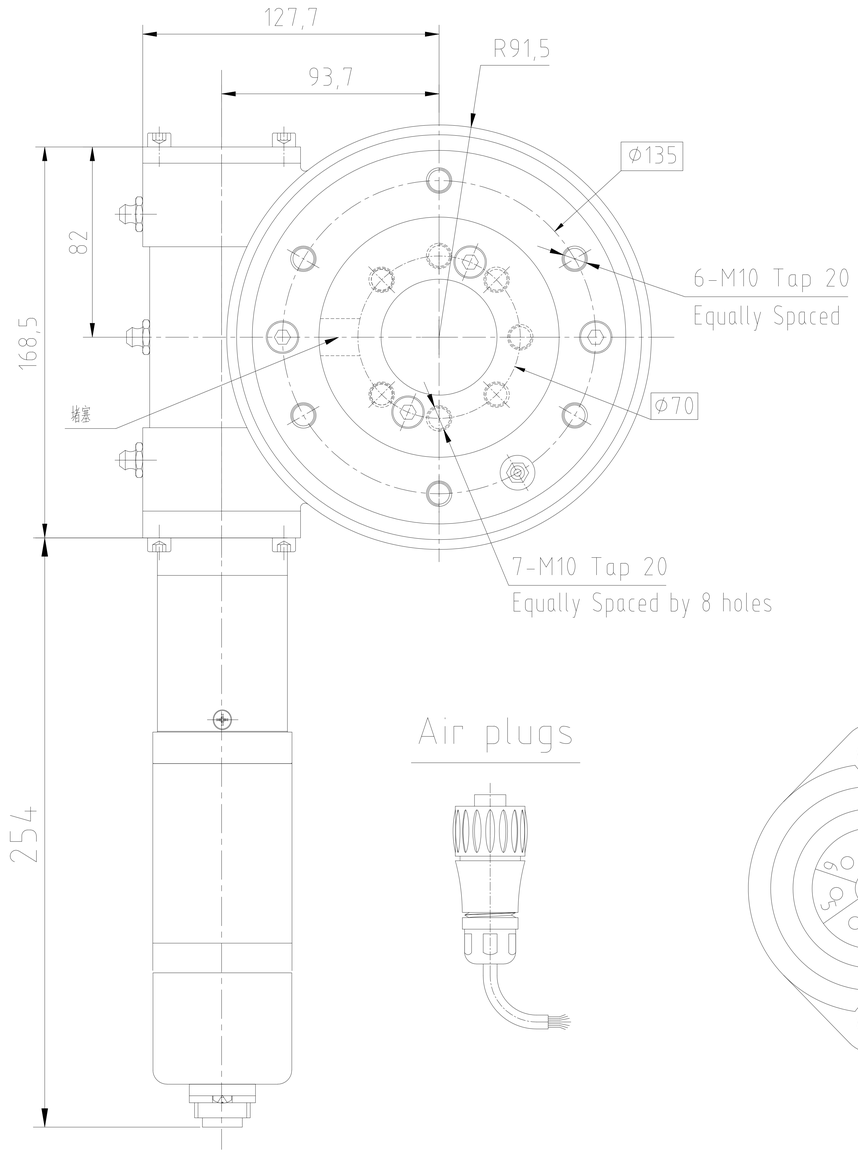

Air plugs

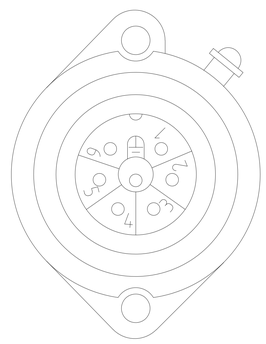

Wire Define:	
Pin 1	motor −
Pin 2	motor +
Pin 3	hall GND
Pin 4	hall +12V
Pin 5	hall A
Pin 6	hall B
Pin E	Ground

MOMENT LOAD CHART

Axial Load & Tilting Moment

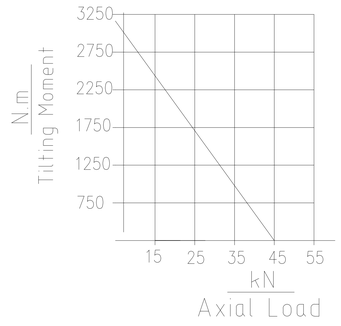

Slewing Drive Performance Parameters	
Rated Output Speed	0,049 rpm
Output Torque (Max.)	603.9 N.m
Tilting Moment (Max.)	1800 N.m
Holding Torque	5000 N.m
Static Axial Rating (Max.)	76 kN
Static Radial Rating (Max.)	22,6 kN
Gear Ratio	62 : 1
Precision	30 %
Efficiency	≤ 0,2
24VDC Planetary Reducer Motor Performance Data (24H/30/33)	
Rated Voltage	24 VDC
Rated Current	<1.2 A
Gear Ratio	575 : 1
Noises	≤60 dB
IP Class	IP54
Temperature	-40 - +80°C

MAGNETIC PULSE GENERATOR DATA		
Output type	-	voltage output
pull-up resistor	-	yes
Output signal	-	2 square wave signals
Phase quadrature	-	90°
Impulses per revolution	ppr	2,channels A and B
Operating voltage	VDC	UN=12(5··· 24)
Operating current	mA	max. 12 (U=12V)
Deviation of pulse width	-	max. 15°
Deviation of phase shift	-	max. 15°
Output voltage(low level)	VDC	max. 0.4 (20mA)
SIGNAL RISE TIME	ns	85
SIGNAL DECAY TIME	ns	60
Operation temperature	℃	-40 ··· +85

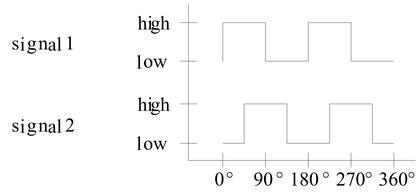

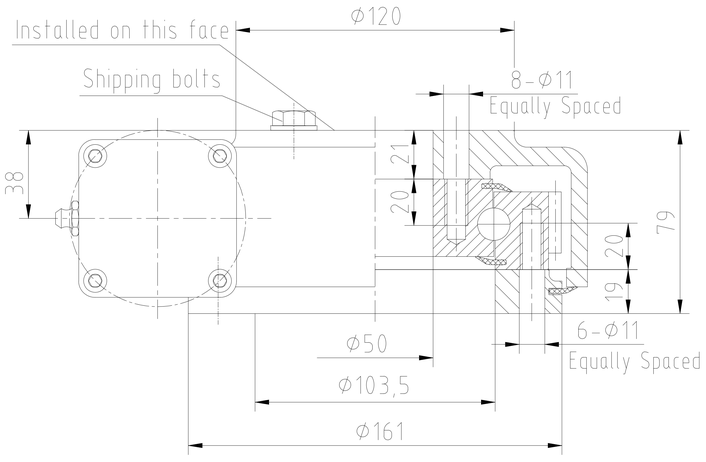

REV	DATE	Revised BY	REVISER
DESIGNED BY	2015-03-31	Kady	
CHECKED BY	2015-03-31	Jack	
APPROVED BY	2015-03-31	Boris	

ALL PROPRIETARY RIGHTS IN THE SUBJECT MATTER HERE OF ARE RESERVED, AND NO PERMISSION IS GRANTED OR TO DISCLOSE REPRODUCE THIS PRINT IN WHOLE OR IN PART, ANY OF THE INFORMATION TO OTHERS.

WEIGHT	SCALE	Slewing Drive
	1 : 3,5	
SIZE	A3	SD5-62-RC-24H3033
SHEET	1 / 1	REV A

SYMBOLE ISO